# SUNNYSIDE NEIGHBORHOOD SKATEPARK

GENERAL NOTES:
1. CONTRACTOR SHALL INSTALL ALL IMPROVEMENTS IN ACCORDANCE WITH THE CITY OF COLLEGE PARK BUILDING CODES AND THE 2006 IBC.
2. CONTRACTOR SHALL READ THESE PLANS AND NOTES ENTIRELY AND BRING ANY DISCREPANCIES TO GRINDLINE SKATEPARKS INC. IMMEDIATELY.
3. CONTRACTOR SHALL VISIT THE SITE AND VERIFY EXISTING CONDITIONS BEFORE SUBMITTAL OF A CONSTRUCTION BID.
4. IT IS THE CONTRACTOR'S RESPONSIBILITY TO LOCATE ALL UTILITIES, SEWERS, WATER LINES, ETC. CALL BEFORE YOU DIG 811.
5. WORK IN PUBLIC STREETS, ONCE BEGUN, SHALL BE COMPLETED WITHOUT DELAY SO AS TO PROVIDE MINIMUM INCONVENIENCE TO THE PUBLIC.
6. IF ANY UTILITIES OF FACILITIES CONFLICT WITH THE PROPOSED IMPROVEMENTS, ALL WORK SHALL STOP IMMEDIATELY AND THE UTILITY COMPANY SHALL BE NOTIFIED.
7. IT SHALL BE THE RESPONSIBILITY OF THE CONTRACTOR TO LOCATE ALL SUBSTRUCTURES WITHIN THE AREA OF PROPOSED IMPROVEMENTS, AND IN THE EVENT OF DAMAGE, HE SHALL BEAR THE TOTAL COST OF REPAIR OR REPLACEMENT.
8. THE CONTRACTOR WILL PROVIDE ALL LABOR, MATERIALS, TRANSPORTATION, AND SERVICES NECESSARY TO FURNISH AND INSTALL ALL CONSTRUCTION ELEMENTS AS SHOWN IN THESE PLANS AND NOTES.
9. THE CONTRACTOR SHALL OBTAIN, COORDINATE, AND PAY FOR ALL PERMITS, FEES, AND AGENCY INSPECTIONS AS REQUIRED.
10. ALL WORK SHALL BE GUARANTEED BY THE CONTRACTOR AS TO MATERIALS AND WORKMANSHIP FOR A PERIOD OF ONE YEAR FOLLOWING THE DATE OF THE FINAL ACCEPTANCE OF THE PROJECT. THE CONTRACTOR SHALL PROVIDE A WRITTEN GUARANTEE ON HIS LETTERHEAD AT THE TIME OF FINAL INSPECTION.
11. ALL DIMENSIONS ARE TAKEN FROM CURB FACE OR EDGE OF PAVING, UNLESS NOTED OTHERWISE ON PLANS. THE DIMENSIONS ARE SHOWN FOR APPROXIMATE LINE, AND ALL RADII, CURVES, AND SURFACES ARE TO HAVE EXTREMELY SMOOTH TRANSITIONS WITH ABSOLUTELY NO ABRUPT CHANGES OR BENDS.
12. ALL FORMS AND ALIGNMENT OF PAVING SHALL BE REVIEWED BY AN INSPECTOR PRIOR TO POURING. NOTIFICATION WILL BE GIVEN WITH AT LEAST 48 HOURS NOTICE.
13. FOR SITE GRADING, SEE RELATIVE VERTICAL CONTROLS AND SITE PLAN PROVIDED.
14. THE DRAWINGS AND SPECIFICATIONS REPRESENT THE FINISHED STRUCTURE. ALL BRACING, TEMPORARY SUPPORTS, SHORING, ETC. ARE THE SOLE RESPONSIBILITY OF THE CONTRACTOR. SITE INSPECTIONS DO NOT INCLUDE THE INSPECTION OF CONSTRUCTION METHODS AND SAFETY CONDITIONS AT THE WORK SITE. THESE VISITS SHALL NOT BE CONSTRUED AS CONTINUOUS AND DETAILED INSPECTIONS.
15. DESIGN MATERIALS, EQUIPMENT, AND PRODUCTS OTHER THAN THOSE DESCRIBED OR INDICATED ON THE DRAWINGS MAY BE CONSIDERED FOR USE, PROVIDED PRIOR APPROVAL IS OBTAINED FROM THE OWNER, GRINDLINE SKATEPARKS INC. AND THE APPLICABLE GOVERNING CODE AUTHORITY.
16. OWNER SHALL PROVIDE INITIAL STAKING OF PARK CORNERS ONE TIME AT OWNERS EXPENSE. CONTRACTOR SHALL PROVIDE ANY OTHER NECESSARY STAKING.

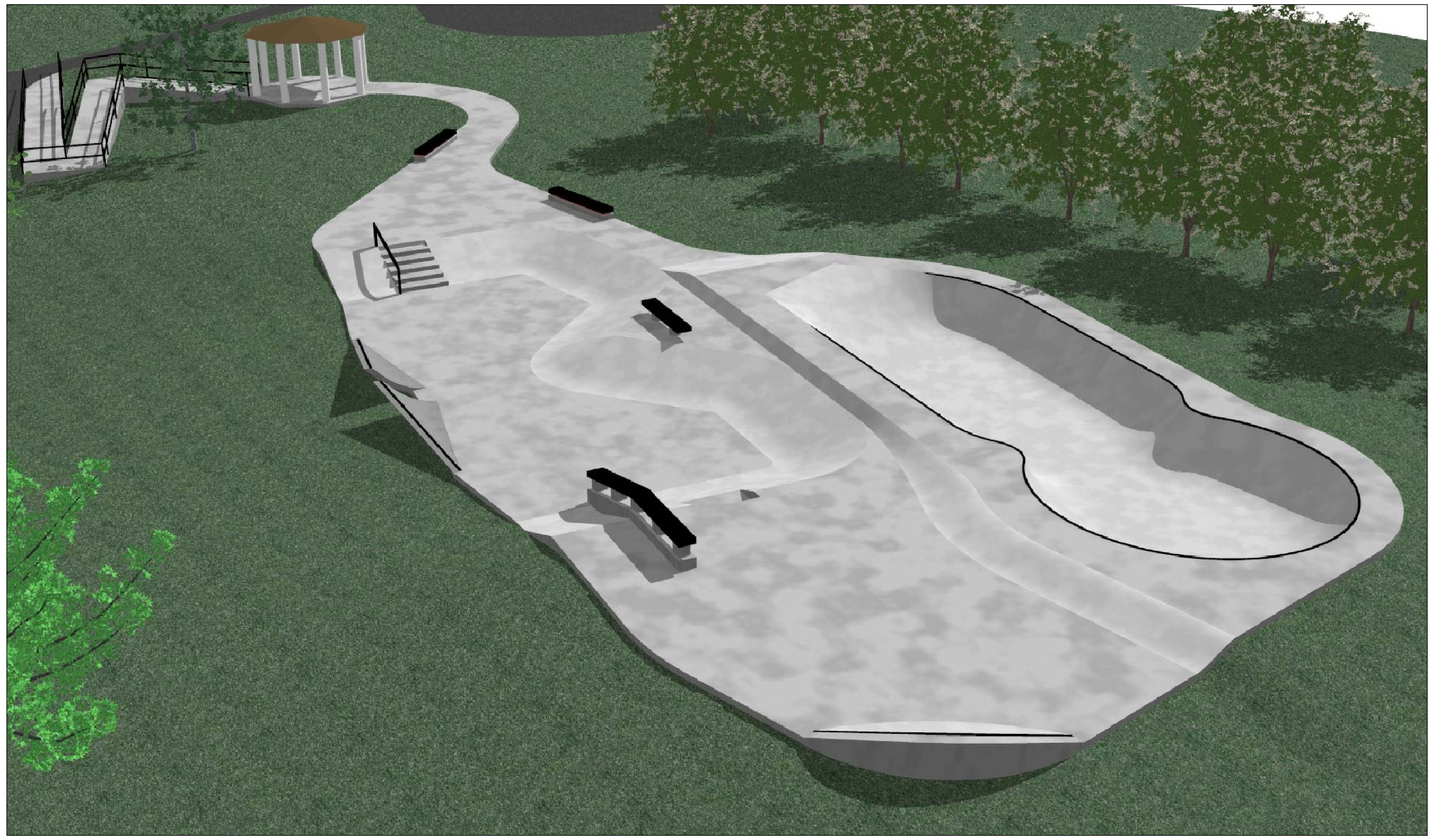

DRAWING INDEX


| | |
|---|---|
| TITLE | TITLE SHEET |
| SP1.0 | DEMOLITION PLAN |
| SP1.1 | SITE PLAN |
| C-1 | SITE PLAN/ SEDIMENT & EROSION CONTROL PLAN |
| C-2 | SEDIMENT & EROSION CONTROL NOTES & DETAILS |
| C-3 | SEDIMENT & EROSION CONTROL NOTES |
| C-4 | STORM WATER MANAGEMENT PLAN |
| SP1.2 | MATERIALS KEY |
| SP1.3 | SCULPTURAL BLEND PLAN |
| SP1.4 | CONCRETE JOINTS |
| SP1.5 | VERTICAL CONTROLS |
| SP1.6 | HORIZONTAL CONTROLS |
| SP1.7 | HORIZONTAL COORDINATES |
| SP1.8 | SECTIONS KEY |
| SP2.1 | SECTIONS |
| SP2.2 | SECTIONS |
| SP3.1 | DETAILS |
| SP3.2 | DETAILS |


M-NCPPC SIGN-OFF LIST

L.Q. X ____________

JOE O'NEIL X ____________

MICK T. X ____________

ETC. X ____________

## VICINITY MAP

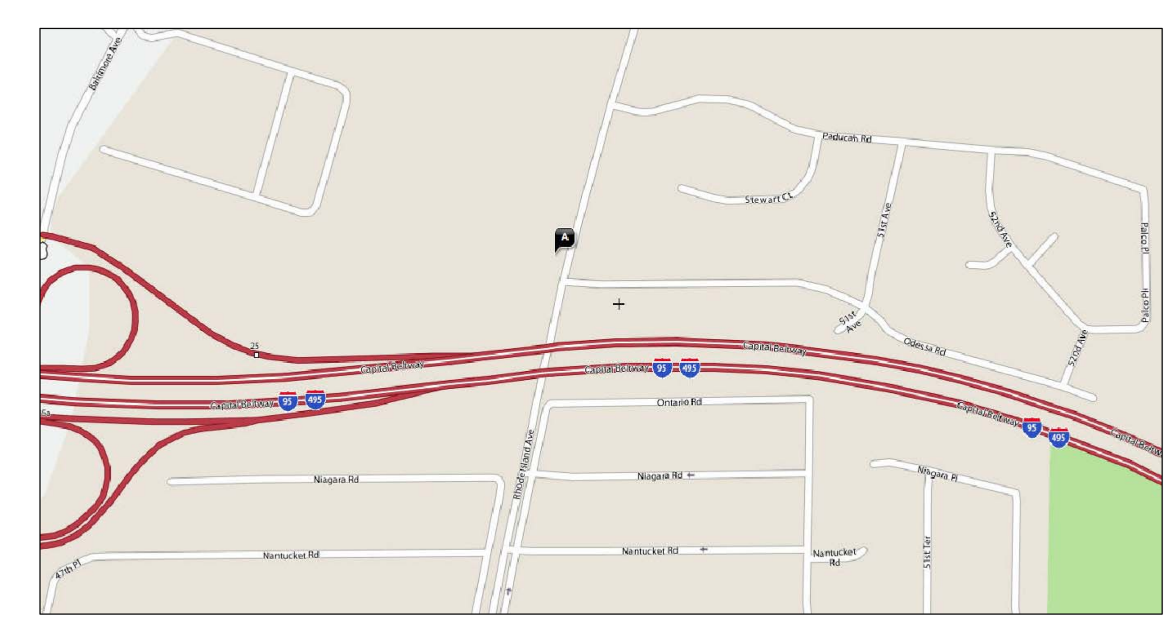


10110 RHODE ISLAND AVE.
BELTSVILLE, MD 20705


GRINDLINE
CONCRETE SKATEPARK DESIGN & CONSTRUCTION
4619 14th Ave SW
Seattle WA 98106
P. 206.932.6414 F. 206.932.6840
www.grindline.com


100% SUBMITTAL

SCALE: N.T.S

TITLE SHEET

PROJECT: SUNNYSIDE NEIGHBORHOOD SKATEPARK
LOCATION: COLLEGE PARK, MD

SHEET: TITLE

DATE: 04.29.11

DRAWN BY: JRJ
CHECKED BY: MBF


This design is an instrument of professional service and is the property of Grindline Skateparks Inc. Any use of these plans shall be restricted to the project for which they were prepared.

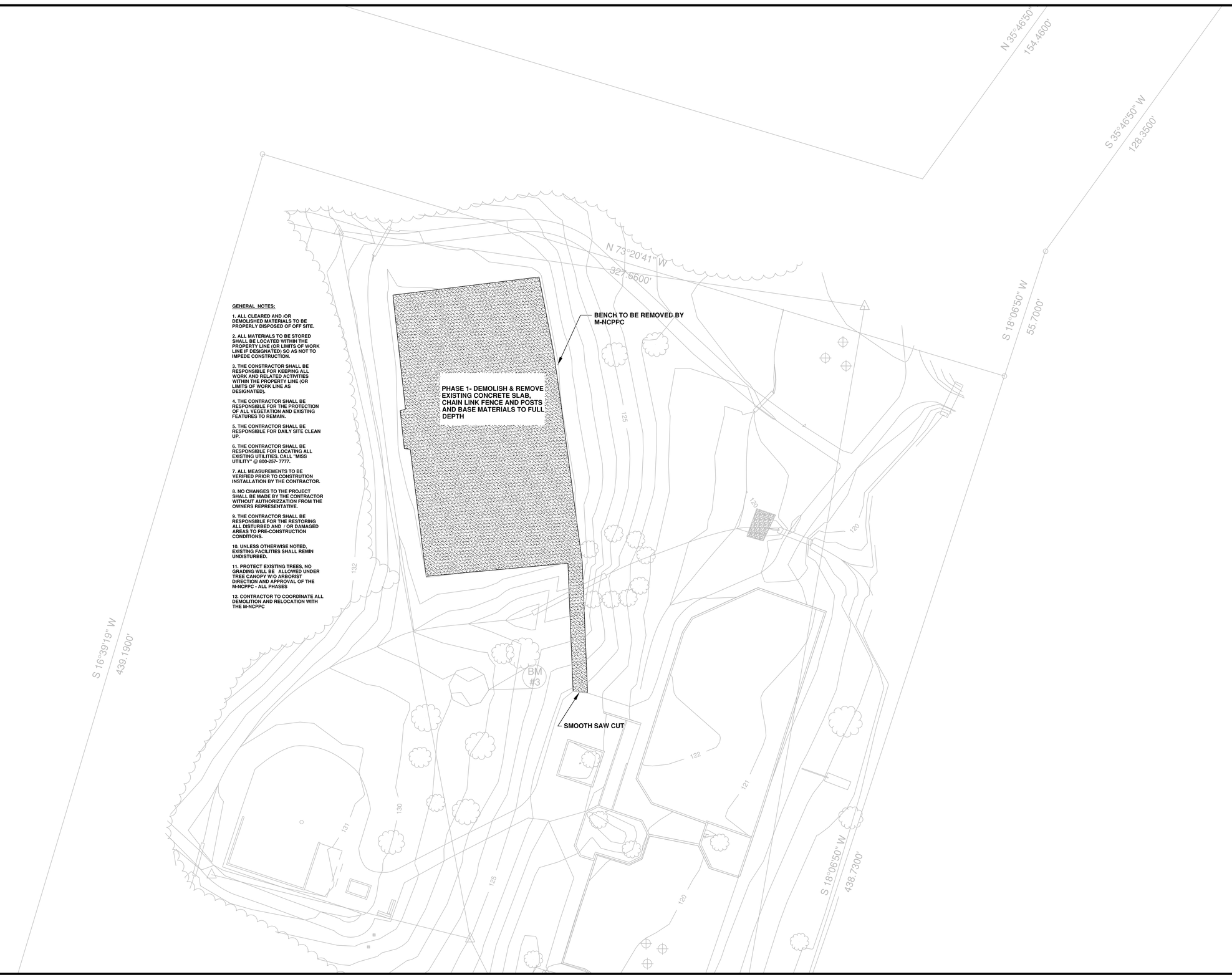


**GENERAL NOTES:**

1. ALL CLEARED AND /OR DEMOLISHED MATERIALS TO BE PROPERLY DISPOSED OF OFF SITE.

2. ALL MATERIALS TO BE STORED SHALL BE LOCATED WITHIN THE PROPERTY LINE (OR LIMITS OF WORK LINE IF DESIGNATED) SO AS NOT TO IMPEDE CONSTRUCTION.

3. THE CONSTRACTOR SHALL BE RESPONSIBLE FOR KEEPING ALL WORK AND RELATED ACTIVITIES WITHIN THE PROPERTY LINE (OR LIMITS OF WORK LINE AS DESIGNATED).

4. THE CONTRACTOR SHALL BE RESPONSIBLE FOR THE PROTECTION OF ALL VEGETATION AND EXISTING FEATURES TO REMAIN.

5. THE CONTRACTOR SHALL BE RESPONSIBLE FOR DAILY SITE CLEAN UP.

6. THE CONTRACTOR SHALL BE RESPONSIBLE FOR LOCATING ALL EXISTING UTILITIES. CALL "MISS UTILITY" @ 800-257- 7777.

7. ALL MEASUREMENTS TO BE VERIFIED PRIOR TO CONSTRUTION INSTALLATION BY THE CONTRACTOR.

8. NO CHANGES TO THE PROJECT SHALL BE MADE BY THE CONTRACTOR WITHOUT AUTHORIZZATION FROM THE OWNERS REPRESENTATIVE.

9. THE CONTRACTOR SHALL BE RESPONSIBLE FOR THE RESTORING ALL DISTURBED AND /OR DAMAGED AREAS TO PRE-CONSTRUCTION CONDITIONS.

10. UNLESS OTHERWISE NOTED, EXISTING FACILITIES SHALL REMIN UNDISTURBED.

11. PROTECT EXISTING TREES, NO GRADING WILL BE ALLOWED UNDER TREE CANOPY W/O ARBORIST DIRECTION AND APPROVAL OF THE M-NCPPC - ALL PHASES

12. CONTRACTOR TO COORDINATE ALL DEMOLITION AND RELOCATION WITH THE M-NCPPC

GRINDLINE
CONCRETE SKATEPARK DESIGN & CONSTRUCTION
4619 14th Ave SW
Seattle WA 98106
P: 206.932.6414 F: 206.932.6840
www.grindline.com

100% SUBMITTAL

SCALE: 1" = 20'

DEMOLITION PLAN

PROJECT: SUNNYSIDE NEIGHBORHOOD SKATEPARK
LOCATION: COLLEGE PARK, MD

SHEET: SP1.0

DATE: 04.29.11

DRAWN BY: JRJ
CHECKED BY: MBF

This design is an instrument of professional service and is the property of Grindline Skateparks Inc. Any use of these plans shall be restricted to the project for which they were prepared.

LEGEND

| | |
|---|---|
| EOC | EDGE OF CONCRETE |
| INV OUT | INVERT OUT |
| INV IN | INVERT IN |
| RIM | RIM ELEVATION |
| TT | TOP OF TRANSITION |
| --- | PROPOSED CONTOURS |
| ——— | EXISTING CONTOURS |
| ~~L.O.D~~ | LIMITS OF DISTURBANCE |
| ~~TPD~~ | TREE PROTECTION DEVICE |

BENCHMARK DATA

BENCHMARK: BM 1/CENTER OF MANHOLE
BM 2/EDGE OF CONC.

LOCATION: NORTHING / EASTING
39.073594.93 / 21,710.10
17,724.69 / 25,138.69 / 21,106.06

ELEV.

N 35°46'50" E
154.4600'

N 73°20'41" W
327.6600'

S 35°46'50" W
128.3500'

S 18°06'50" W
55.7000'

S 16°39'19" W
439.1900'

S 18°06'50" W
438.7308'

131.00 EOC
132.00 EOC
131.00 EOC
6" SDR-35 DRAINLINE, 1% SLOPE MIN. 60 LF
132.00 EOC
128.00 RIM
124.40 INV IN
132.10 TT
131.00 TT
125.90 INV OUT
TPD
128.50 BT
132.00 EOC
128.50 EOC
131.00 TT
128.50 BT
131.00 TT
TPD
129.00 EOC
126.70 EOC
126.70 EOC
TPD
128.00 INV IN
129.00 EOC
128.00 EOC
124.00 EOC
EXISITNG SHELTER TO REMAIN
EXISITNG HANDBALL COURT
EXISITNG BITUMINOUS CONC. PATH
EXISITNG PLANTER
EXISITNG PLANTER
EXISITNG PARKING
EXISITNG PLAY AREA
EXISITNG BITUMINOUS CONC. PATH
MISS UTILITY
T NARRATIVE
/ GRADING, SEDIMENT & EROSION CONTROL PLAN

Bench Marks

BM #1 - Square cut in rim of Manhole.
Elevation = 121.01'
BM #2 - Square cut in conc. base of water station.
Elevation = 121.06'
BM #3 - Square cut in concrete slab.
Elevation = 129.00'

Topographic Survey
p/o Sunnyside Neighborhood Playground
Scale: 1" = 1" Date: March 14, 2008
By: R.Moreland, M-NCPPC
Job #08013

SCALE: 1"=20'

NORTH

GRINDLINE
CONCRETE SKATEPARK DESIGN & CONSTRUCTION
461 9 14th Ave SW
Seattle WA 98105
P: 206.932.6414 F: 206.932.6840
www.grindline.com

100% SUBMITTAL

SCALE: 1" = 20'

SITE PLAN

PROJECT: SUNNYSIDE NEIGHBORHOOD SKATEPARK
LOCATION: COLLEGE PARK, MD

SHEET: SP1.1

DATE: 04.29.11

DRAWN BY: JRJ
CHECKED BY: MBF

This design is an instrument of professional service and is the property of Grindline Skateparks Inc. Any use of these plans shall be restricted to the project for which they were prepared.

LEGEND

- CONCRETE SURFACING — 1 SP3.1
- SHOTCRETE SURFACING — 2 SP3.1
- SQUARE GRIND EDGE — 12 SP3.2
- STEEL COPING — 11 SP3.2
- CONCRETE EDGE — 9 SP3.1
- FLAT STEEL BAR GRIND EDGE — 13 SP3.2
- REINFORCED CONCRETE LEDGE — 10 SP3.2
- STEEL EDGE- BANKED LEDGE — 15 SP3.2
- HUBBA- SQUARE GRIND EDGE — 14 SP3.2
- DRAIN — 9 SP3.1
- EXISTING SLAB CONNECTION — 8 SP3.1
- HANDRAIL FOOTING — 16 SP3.2

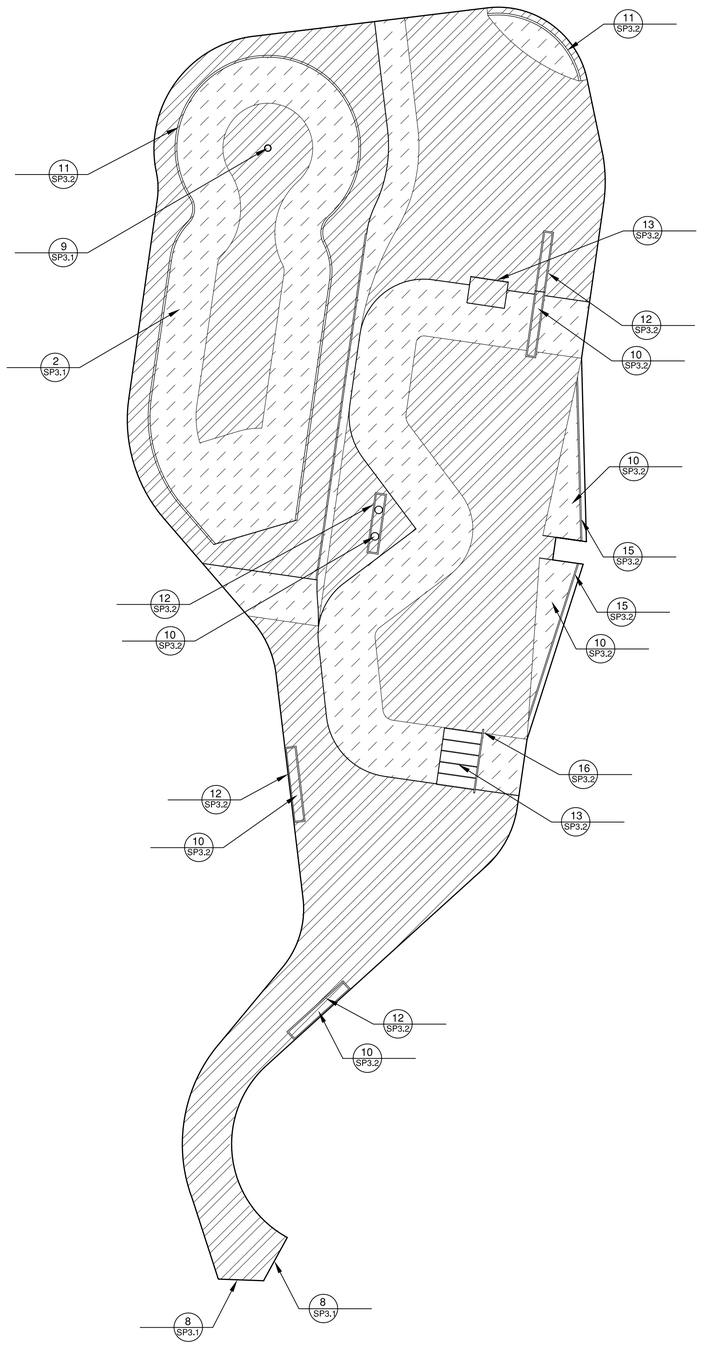


0 5 10 20

SCALE: 1"=10'

NORTH


GRINDLINE
CONCRETE SKATEPARK DESIGN & CONSTRUCTION
461 9 14th Ave SW
Seattle WA 98106
P. 206.932.6414 F. 206.932.6840
www.grindline.com


100% SUBMITTAL

SCALE: 1" = 10'

# MATERIALS KEY

PROJECT: SUNNYSIDE NEIGHBORHOOD SKATEPARK
LOCATION: COLLEGE PARK, MD

SHEET: SP1.2

DATE: 04.29.11

DRAWN BY: JRJ
CHECKED BY: MBF


This design is an instrument of professional service and is the property of Grindline Skateparks Inc. Any use of these plans shall be restricted to the project for which they were prepared.

LEGEND

SCULPTURAL BLEND ZONE

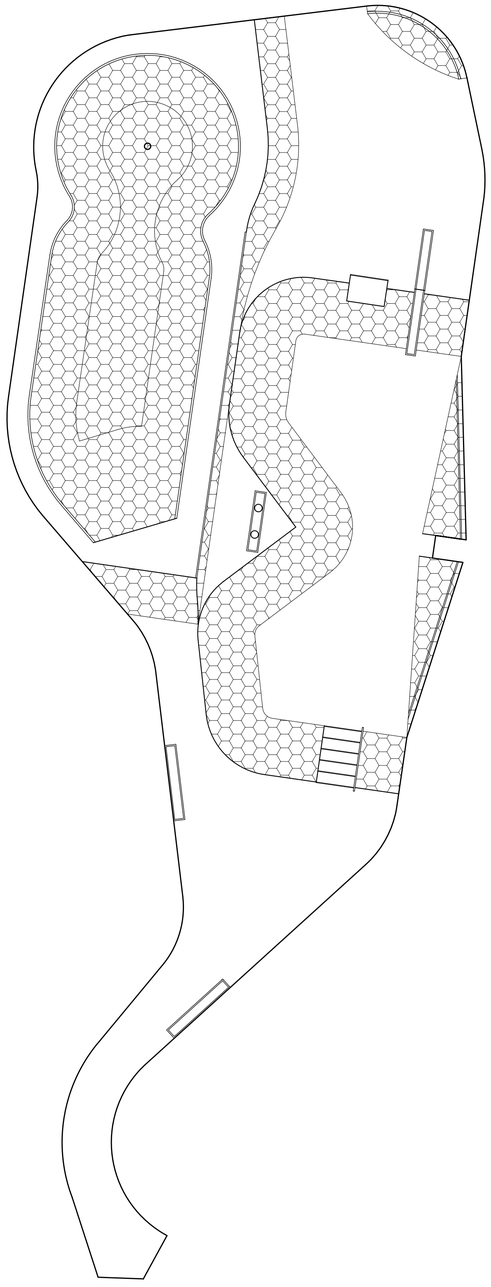

0 5 10 20

SCALE: 1"=10'

NORTH


GRINDLINE
CONCRETE SKATEPARK DESIGN & CONSTRUCTION
4619 14th Ave SW
Seattle WA 98106
P: 206.932.6414 F: 206.932.6840
www.grindline.com


100% SUBMITTAL

SCALE: 1" = 10'

SCULPTURAL BLEND PLAN

PROJECT: SUNNYSIDE NEIGHBORHOOD SKATEPARK
LOCATION: COLLEGE PARK, MD

SHEET:
SP1.3

DATE: 04.29.11

DRAWN BY: JRJ
CHECKED BY: MBF


This design is an instrument of professional service and is the property of Grindline Skateparks Inc. Any use of these plans shall be restricted to the project for which they were prepared.

LEGEND

— — COLD JOINT (6 / SP3.1)

—·····— KEY JOINT (4 / SP3.1)

—··—··— BOND BEAM-STEEL COPING (7 / SP3.1)

····· SAW CUT (5 / SP3.1)

**NOTE:**
SAW CUT PATTERN IS SHOWN TO PROVIDE DIRECTION. CONTRACTOR TO CUT SLAB AS NEEDED TO PREVENT CRACKING. SAW CUTS MUST BE MADE BEFORE ANY SIGNS OF THERMAL CRACKING. THERMAL CRACKING AS A RESULT OF INSUFFICANT CRACK CONTROL MAY RESULT IN UNSKATABLE SURFACES.

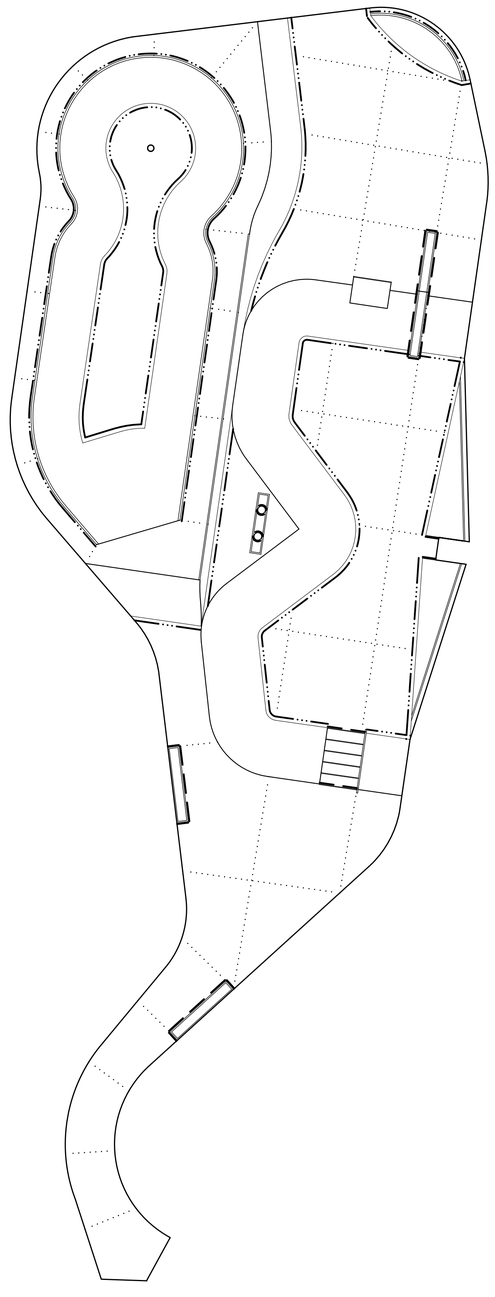

0 10 20 40
SCALE: 1"=20'

NORTH


GRINDLINE
CONCRETE SKATEPARK DESIGN & CONSTRUCTION
4619 14th Ave SW
Seattle WA 98106
P: 206.932.6414 F: 206.932.6840
www.grindline.com


100% SUBMITTAL

SCALE: 1" = 20'

CONCRETE JOINTS

PROJECT: SUNNYSIDE NEIGHBORHOOD SKATEPARK
LOCATION: COLLEGE PARK, MD

SHEET: SP1.4

DATE: 04.29.11

DRAWN BY: JRJ
CHECKED BY: MBF


This design is an instrument of professional service and is the property of Grindline Skateparks Inc. Any use of these plans shall be restricted to the project for which they were prepared.

LEGEND
EOC EDGE OF CONCRETE
INV INVERT ELEVATION
RIM RIM ELEVATION
FS FINISHED SURFACE
TT TOP OF TRANSITION
BT BOTTOM OF TRANSITION
TB TOP OF BANK
BB BOTTOM OF BANK

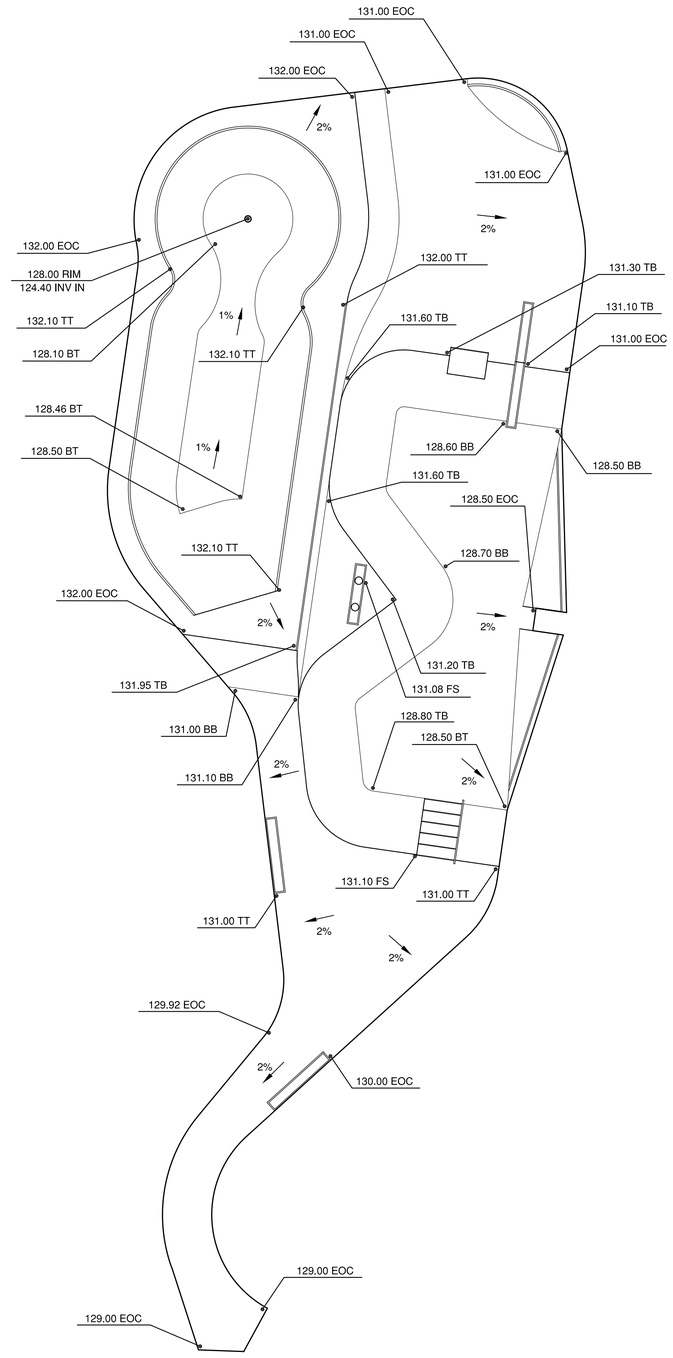


0 10 20 40
SCALE: 1"=20'

NORTH


GRINDLINE
CONCRETE SKATEPARK DESIGN & CONSTRUCTION
4619 14th Ave SW
Seattle WA 98106
P: 206.932.6414 F: 206.932.6840
www.grindline.com


100% SUBMITTAL

SCALE: 1" = 20'

VERTICAL CONTROLS

PROJECT: SUNNYSIDE NEIGHBORHOOD SKATEPARK
LOCATION: COLLEGE PARK, MD

SHEET:
SP1.5

DATE: 04.29.11

DRAWN BY: JRJ
CHECKED BY: MBF


This design is an instrument of professional service and is the property of Grindline Skateparks Inc. Any use of these plans shall be restricted to the project for which they were prepared.

LEGEND

- P.O.B.





GRINDLINE
CONCRETE SKATEPARK DESIGN & CONSTRUCTION
461 9 14th Ave SW
Seattle WA 98106
P.206.932.6414 F.206.932.6840
www.grindline.com


100% SUBMITTAL

SCALE: 1" = 20'

HORIZONTAL CONTROLS

PROJECT: SUNNYSIDE NEIGHBORHOOD SKATEPARK
LOCATION: COLLEGE PARK, MD

SHEET: SP1.6

DATE: 04.29.11

DRAWN BY: JRJ
CHECKED BY: MBF


This design is an instrument of professional service and is the property of Grindline Skateparks Inc. Any use of these plans shall be restricted to the project for which they were prepared.

## POINT TABLE

| POINT NUMBER | NORTHING | EASTING |
|---|---|---|
| 1 | 0.0000 | 0.0000 |
| 2 | 22.4766 | -2.9777 |
| 3 | 26.0416 | 0.9532 |
| 4 | 32.7595 | 8.3606 |
| 5 | 48.9557 | 26.2190 |
| 6 | 56.7256 | 30.3520 |
| 7 | 58.3032 | 30.5800 |
| 8 | 65.7385 | 31.6547 |
| 9 | 88.8478 | 39.0588 |
| 10 | 89.4222 | 35.0379 |
| 11 | 92.3921 | 35.4622 |
| 12 | 88.9554 | 38.3057 |
| 13 | 91.9246 | 38.7343 |
| 14 | 91.8174 | 39.4852 |
| 15 | 116.0246 | 38.8430 |
| 16 | 123.4420 | 39.9030 |
| 17 | 136.4983 | 41.7689 |
| 18 | 143.4183 | 41.5473 |
| 19 | 152.7896 | 39.5892 |
| 20 | 162.2654 | 26.3888 |
| 21 | 160.4552 | 11.5204 |
| 22 | 158.4539 | -4.9175 |
| 23 | 140.5175 | -17.2661 |
| 24 | 137.0227 | -17.1486 |
| 25 | 110.7437 | -20.9087 |
| 26 | 94.8578 | -16.2635 |
| 27 | 88.9558 | -11.1795 |
| 28 | 81.2311 | -4.5253 |
| 29 | 74.2986 | -1.4678 |
| 30 | 64.6649 | -0.3094 |
| 31 | 54.7365 | 0.8845 |
| 32 | 44.7835 | 2.0813 |
| 33 | 35.6956 | -0.5918 |
| 34 | 25.7579 | -8.8241 |
| 35 | 5.0311 | -12.5066 |
| 36 | -5.4933 | -9.0929 |
| 37 | -5.7187 | -3.0898 |
| 38 | 143.7613 | -2.5606 |
| 39 | 137.2501 | -12.6405 |
| 40 | 134.7832 | 5.4014 |
| 41 | 131.2010 | 4.7718 |
| 42 | 126.3911 | 5.5848 |
| 43 | 94.5968 | 1.0272 |
| 44 | 91.5234 | -9.4516 |
| 45 | 96.5663 | -13.7753 |
| 46 | 110.8951 | -17.9197 |
| 47 | 129.3682 | -15.2096 |
| 48 | 133.7894 | -13.0246 |
| 49 | 146.1631 | 13.2425 |
| 50 | 136.1796 | 11.5793 |
| 51 | 132.4277 | 10.4746 |
| 52 | 86.7796 | 3.9368 |
| 53 | 124.2903 | 33.9674 |
| 54 | 132.6560 | 35.1711 |
| 55 | 124.9976 | 29.0162 |
| 56 | 126.1042 | 29.1810 |
| 57 | 125.7046 | 24.0664 |
| 58 | 126.3879 | 19.1891 |
| 59 | 119.2414 | 9.6054 |
| 60 | 116.2641 | 31.4726 |
| 61 | 109.7974 | 8.2526 |
| 62 | 102.7474 | 10.0591 |
| 63 | 93.4889 | 17.0116 |
| 64 | 86.3170 | 7.4505 |
| 65 | 80.6860 | 4.0920 |
| 66 | 68.7888 | 5.1738 |
| 67 | 60.8482 | 12.8433 |
| 68 | 59.8638 | 19.7039 |
| 69 | 59.1299 | 24.8181 |
| 70 | 27.2652 | -0.1566 |
| 71 | 33.8683 | 7.3550 |
| 72 | 67.2884 | 20.7645 |
| 73 | 98.2923 | 11.6324 |
| 74 | 92.5304 | 11.5711 |
| 75 | 96.0193 | 12.0663 |
| 76 | 54.9158 | 2.3727 |
| 77 | 161.2525 | 26.4727 |
| 78 | 152.6058 | 38.5189 |

## LINE TABLE

| LINE | LENGTH | BEARING |
|---|---|---|
| L0 | 39.42 | S47°47'40"W |
| L1 | 9.11 | S08°13'28"W |
| L2 | 24.27 | N17°45'55"E |
| L3 | 4.06 | S81°52'13"E |
| L4 | 3.00 | N08°07'47"E |
| L5 | 4.00 | S81°52'13"E |
| L6 | 24.22 | S01°31'11"E |
| L7 | 20.67 | N08°07'59"E |
| L8 | 9.50 | S11°48'07"E |
| L9 | 31.50 | N83°03'31"E |
| L10 | 26.50 | N08°08'34"E |
| L11 | 18.00 | N40°44'31"W |
| L12 | 29.73 | N06°51'24"W |
| L13 | 12.90 | S39°38'17"W |
| L14 | 11.00 | S17°58'17"E |
| L15 | 6.00 | N87°56'54"W |
| L16 | 6.50 | S28°39'51"W |
| L17 | 18.67 | S08°20'46"W |
| L18 | 6.67 | N40°36'33"W |
| L19 | 11.50 | S73°39'12"W |
| L20 | 32.00 | N08°09'28"E |
| L21 | 15.00 | N06°52'13"W |
| L22 | 46.00 | S08°09'02"W |
| L23 | 5.00 | N82°01'30"W |
| L24 | 3.50 | N08°28'06"E |
| L25 | 5.00 | S81°31'54"E |
| L26 | 16.75 | S08°07'08"W |
| L27 | 1.35 | S81°48'31"E |
| L28 | 6.00 | S81°52'01"E |
| L29 | 3.67 | S81°52'18"E |
| L30 | 21.00 | S01°32'11"E |
| L31 | 21.00 | N17°45'55"E |
| L32 | 1.75 | S81°52'13"E |
| L33 | 1.75 | S81°52'13"E |
| L34 | 8.50 | N08°07'47"E |
| L35 | 5.00 | S81°50'04"E |
| L36 | 5.82 | S81°50'04"E |
| L37 | 5.00 | S81°50'04"E |
| L38 | 7.00 | S81°50'04"E |
| L39 | 9.88 | S06°10'31"E |
| L40 | 1.50 | N42°12'33"W |
| L41 | 10.00 | N47°47'27"E |
| L42 | 1.50 | N83°07'47"E |
| L43 | 10.00 | N06°52'13"W |
| L44 | 15.27 | N81°48'27"W |
| L45 | 9.50 | S08°09'00"W |

## CURVE TABLE

| CURVE | LENGTH | RADIUS | Tangent | CHORD | CHORD DIRECTION |
|---|---|---|---|---|---|
| C0 | 26.42 | 14.00 | 108°08'34" | 22.67 | S07°32'48"E |
| C1 | 8.98 | 13.00 | 39°34'12" | 8.80 | N28°00'34"E |
| C2 | 6.96 | 20.00 | 19°56'06" | 6.92 | N01°50'04"W |
| C3 | 17.85 | 12.00 | 85°13'42" | 16.25 | N54°19'39"W |
| C4 | 24.37 | 15.00 | 93°05'00" | 21.78 | S34°32'46"W |
| C5 | 3.51 | 10.00 | 20°08'19" | 3.50 | N01°55'35"W |
| C6 | 17.06 | 20.00 | 48°53'05" | 16.55 | S16°17'58"E |
| C7 | 7.69 | 13.00 | 33°53'06" | 7.58 | N23°47'58"W |
| C8 | 9.74 | 12.00 | 46°29'41" | 9.47 | N16°23'26"E |
| C9 | 22.11 | 20.50 | 61°47'15" | 21.05 | S10°04'29"W |
| C10 | 54.73 | 12.00 | 261°17'37" | 18.21 | N82°12'51"W |
| C11 | 3.75 | 2.83 | 75°49'57" | 3.48 | N06°20'05"E |
| C12 | 5.01 | 8.00 | 35°54'18" | 4.93 | S26°17'55"W |
| C13 | 15.38 | 18.00 | 48°57'19" | 14.92 | S16°07'54"E |
| C14 | 4.96 | 8.00 | 35°30'10" | 4.88 | N09°35'37"W |
| C15 | 3.91 | 3.00 | 74°37'38" | 3.64 | S09°58'07"W |
| C16 | 16.27 | 11.00 | 84°45'17" | 14.83 | N54°19'46"W |
| C17 | 10.26 | 18.00 | 32°39'23" | 10.12 | N09°27'28"E |
| C18 | 3.93 | 12.00 | 18°45'30" | 3.91 | S16°24'25"W |
| C19 | 13.33 | 8.50 | 89°49'29" | 12.00 | S53°03'45"W |
| C20 | 7.47 | 9.50 | 45°02'39" | 7.28 | S14°22'19"E |
| C21 | 8.78 | 8.50 | 59°12'37" | 8.40 | S23°25'47"W |
| C22 | 11.88 | 9.00 | 75°39'33" | 11.04 | S44°00'18"E |


GRINDLINE
CONCRETE SKATEPARK DESIGN & CONSTRUCTION
461 9 14th Ave SW
Seattle WA 98106
P: 206.932.6414 F: 206.932.6840
www.grindline.com


100% SUBMITTAL

SCALE: N.T.S

HORIZONTAL COORDINATES

PROJECT: SUNNYSIDE NEIGHBORHOOD SKATEPARK
LOCATION: COLLEGE PARK, MD

SHEET: SP1.7

DATE: 04.29.11

DRAWN BY: JRJ
CHECKED BY: MBF


This design is an instrument of professional service and is the property of Grindline Skateparks Inc. Any use of these plans shall be restricted to the project for which they were prepared.

LEGEND

A SP2.1 — SECTION LOCATION

8 FT TRANSITION RADII

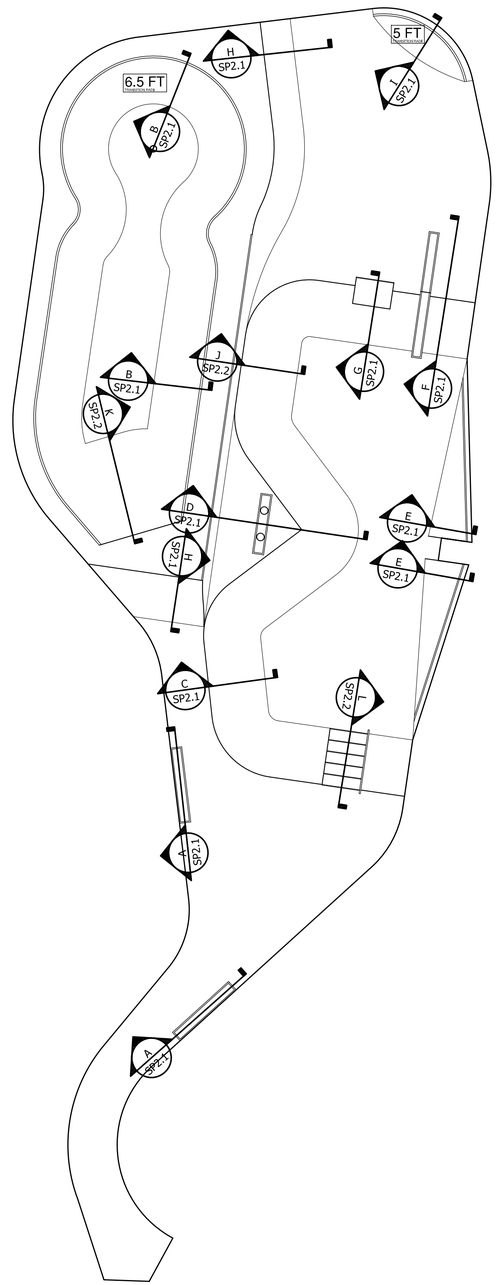


SCALE: 1"=20'

NORTH


GRINDLINE
CONCRETE SKATEPARK DESIGN & CONSTRUCTION
4619 14th Ave SW
Seattle WA 98106
P.206.932.6414 F.206.932.6840
www.grindline.com


100% SUBMITTAL

SCALE: 1" = 20'

SECTIONS KEY

PROJECT: SUNNYSIDE NEIGHBORHOOD SKATEPARK
LOCATION: COLLEGE PARK, MD

SHEET: SP1.8

DATE: 04.29.11

DRAWN BY: JRJ
CHECKED BY: MBF


This design is an instrument of professional service and is the property of Grindline Skateparks Inc. Any use of these plans shall be restricted to the project for which they were prepared.

REBAR REINFORCEMENT PER DETAILS 1,2,3/ SP3.1
UNLESS OTHERWISE NOTED TYP.
STEEL:
CONTINUOUS WELD ON ALL JOINTS
ALL STEEL TO BE PAINTED BLACK

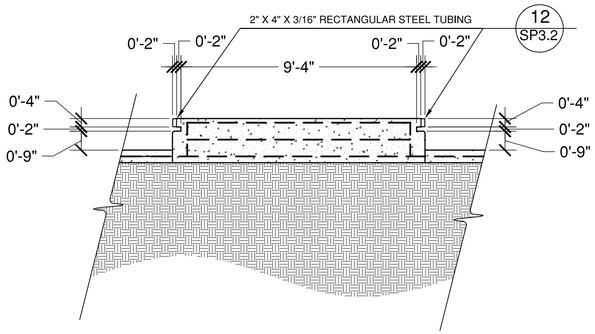


A SP2.1 SECTION A
SCALE: 1" = 3'

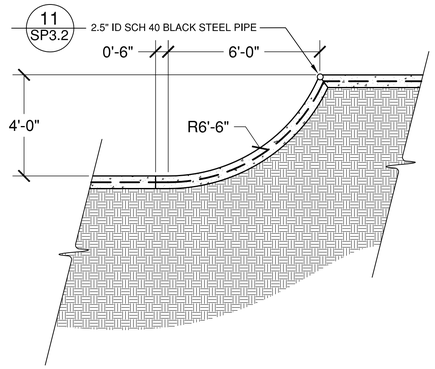


B SP2.1 SECTION B
SCALE: 1" = 3'

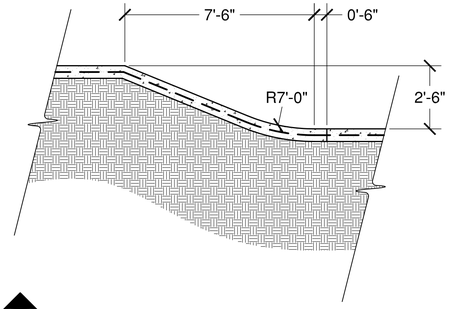


C SP2.1 SECTION C
SCALE: 1" = 3'

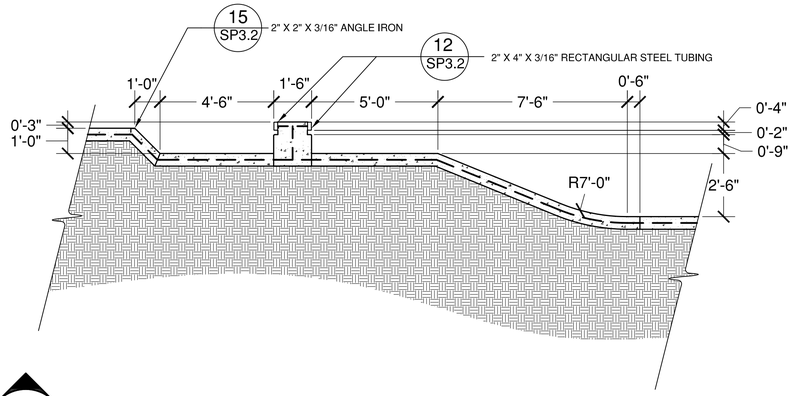


D SP2.1 SECTION D
SCALE: 1" = 3'

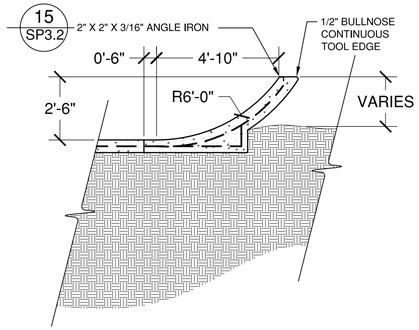


E SP2.1 SECTION E
SCALE: 1" = 3'

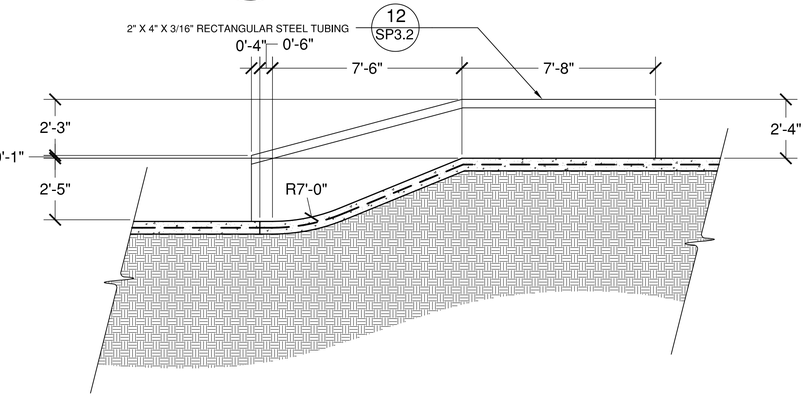


F SP2.1 SECTION F
SCALE: 1" = 3'

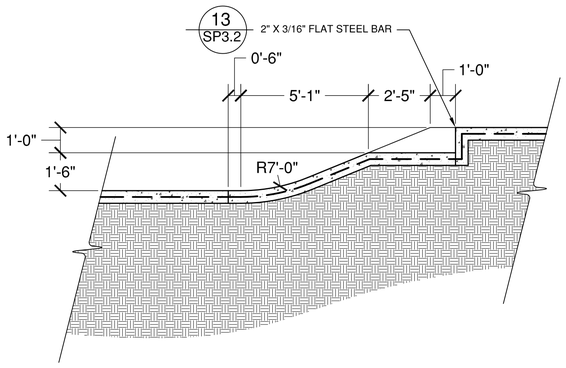


G SP2.1 SECTION G
SCALE: 1" = 3'

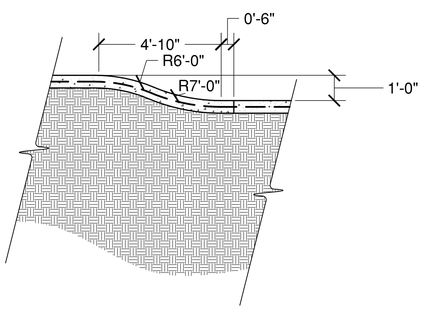


H SP2.1 SECTION H
SCALE: 1" = 3'

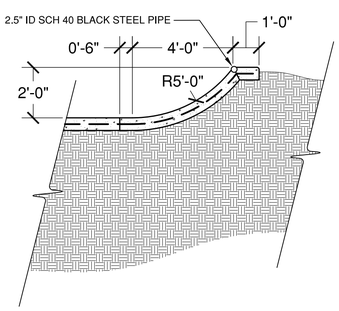


I SP2.1 SECTION I
SCALE: 1" = 3'


GRINDLINE
CONCRETE SKATEPARK DESIGN & CONSTRUCTION
461 9 14th Ave SW
Seattle WA 98106
P: 206.932.6414 F: 206.932.6840
www.grindline.com


100% SUBMITTAL

SCALE: 1" = 3'

SECTIONS

PROJECT: SUNNYSIDE NEIGHBORHOOD SKATEPARK
LOCATION: COLLEGE PARK, MD

SHEET: SP2.1

DATE: 04.29.11

DRAWN BY: JRJ
CHECKED BY: MBF


This design is an instrument of professional service and is the property of Grindline Skateparks Inc. Any use of these plans shall be restricted to the project for which they were prepared.

REBAR REINFORCEMENT PER DETAILS 1,2,3/ SP3.1
UNLESS OTHERWISE NOTED TYP.
STEEL:
CONTINUOUS WELD ON ALL JOINTS
ALL STEEL TO BE PAINTED BLACK

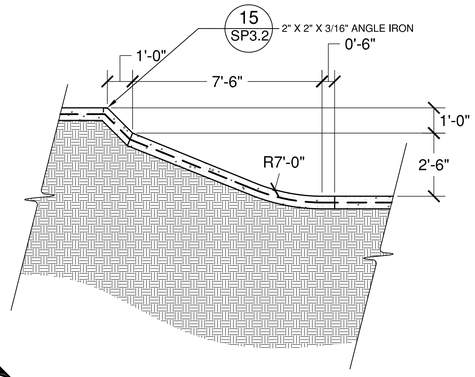


J
SP2.2

## SECTION J
SCALE: 1" = 3'

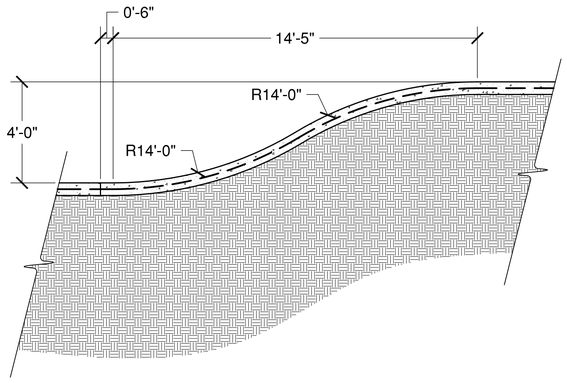


K
SP2.2

## SECTION K
SCALE: 1" = 3'

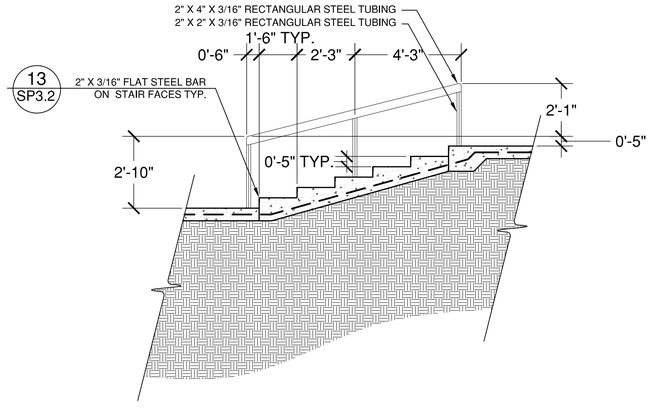


L
SP2.2

## SECTION L
SCALE: 1" = 3'


GRINDLINE
CONCRETE SKATEPARK DESIGN & CONSTRUCTION
46 l 9 14th Ave SW
Seattle WA 98106
P. 206.932.6414 F. 206.932.6840
www.grindline.com


100% SUBMITTAL

SCALE: 1" = 3'

SECTIONS

PROJECT: SUNNYSIDE NEIGHBORHOOD SKATEPARK
LOCATION: COLLEGE PARK, MD

SHEET: SP2.2

DATE: 04.29.11

DRAWN BY: JRJ
CHECKED BY: MBF


This design is an instrument of professional service and is the property of Grindline Skateparks Inc. Any use of these plans shall be restricted to the project for which they were prepared.

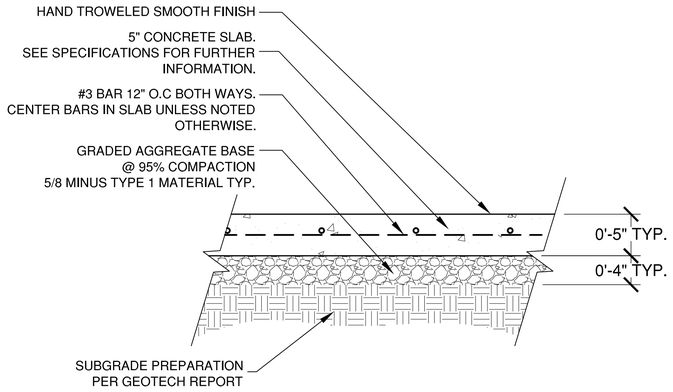


1 SP3.1 CONCRETE SURFACING
NTS

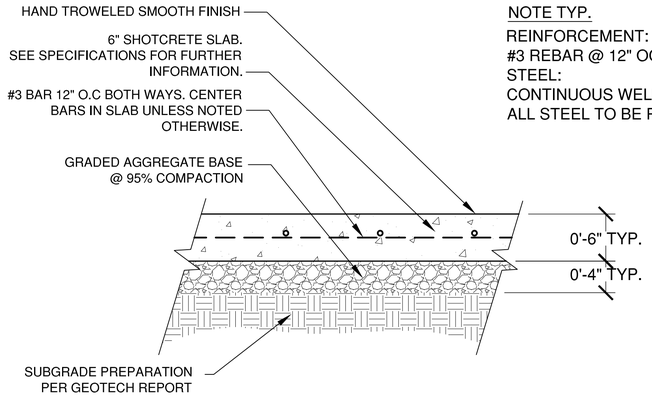


2 SP3.1 SHOTCRETE SURFACING
NTS

NOTE TYP.
REINFORCEMENT:
#3 REBAR @ 12" OC UNLESS OTHERWISE NOTED TYP.
STEEL:
CONTINUOUS WELD ON ALL JOINTS
ALL STEEL TO BE PAINTED BLACK

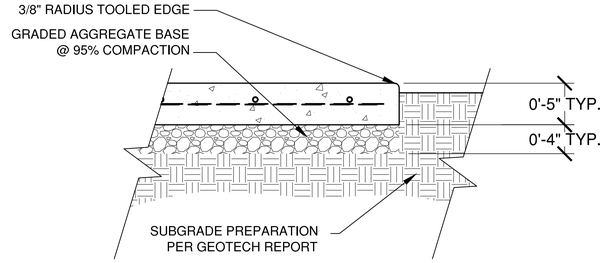


3 SP3.1 CONCRETE EDGE
NTS

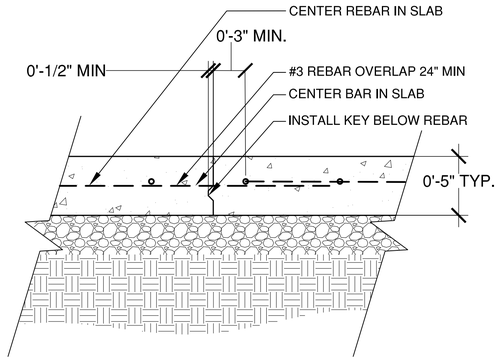


4 SP3.1 KEY JOINT
SCALE: NTS

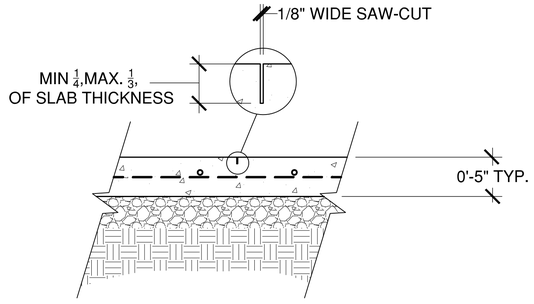


5 SP3.1 SAW-CUT JOINT
NTS

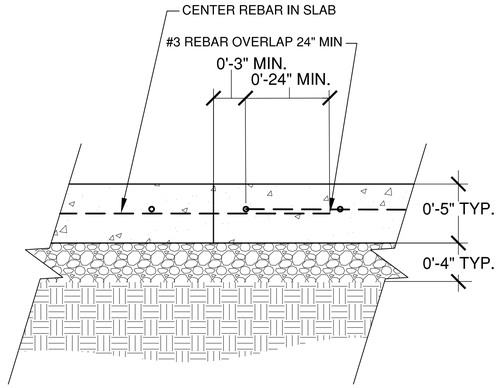


6 SP3.1 COLD JOINT
SCALE: NTS

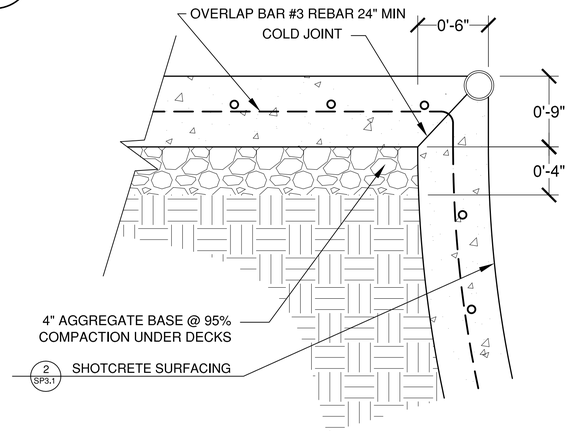


7 SP3.1 BOND BEAM-STEEL COPING
SCALE: NTS

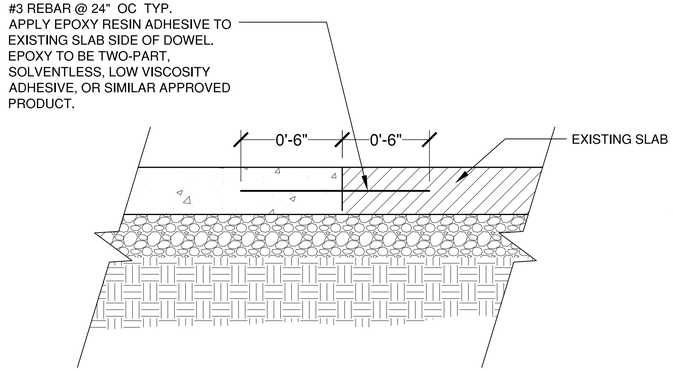


8 SP3.1 EXISTING SLAB CONNECTION
NTS

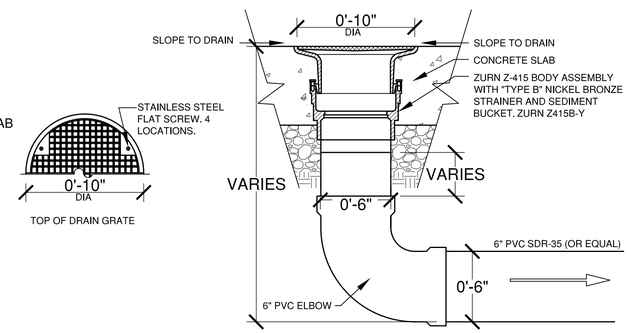


9 SP3.1 DRAIN
NTS

GRINDLINE
CONCRETE SKATEPARK DESIGN & CONSTRUCTION
461 9 14th Ave SW
Seattle WA 98106
P: 206.932.6414 F: 206.932.6840
www.grindline.com

100% SUBMITTAL

SCALE: N.T.S

DETAILS

PROJECT: SUNNYSIDE NEIGHBORHOOD SKATEPARK
LOCATION: COLLEGE PARK, MD

SHEET: SP3.1

DATE: 04.29.11

DRAWN BY: JRJ
CHECKED BY: MBF

This design is an instrument of professional service and is the property of Grindline Skateparks Inc. Any use of these plans shall be restricted to the project for which they were prepared.

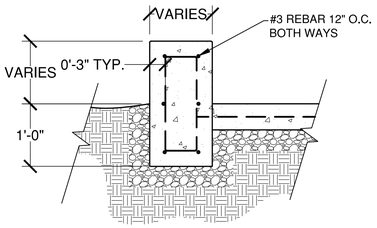


10 SP3.2 REINFORCED CONCRETE LEDGE
NTS

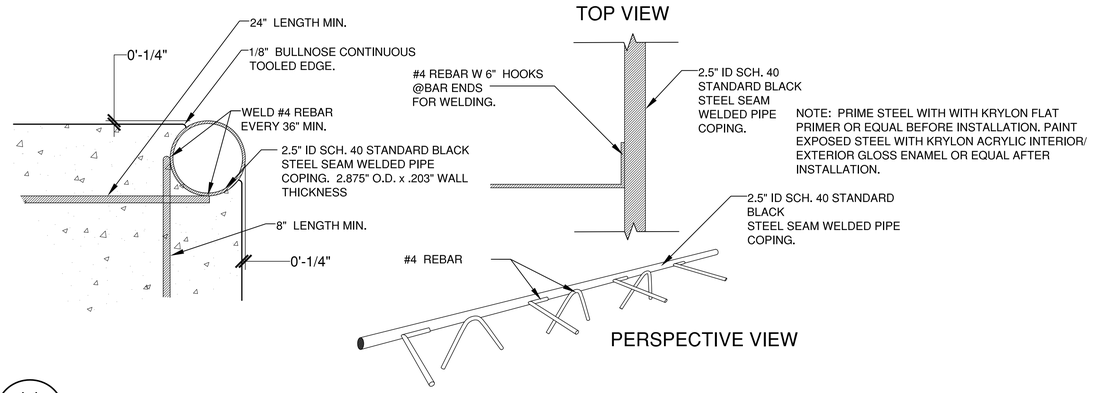


11 SP3.2 STEEL COPING
SCALE: NTS

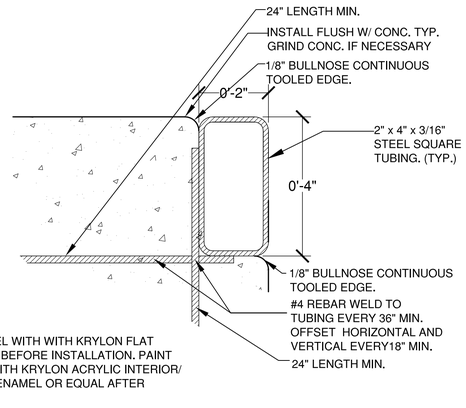


12 SP3.2 SQUARE GRIND EDGE
SCALE: NTS

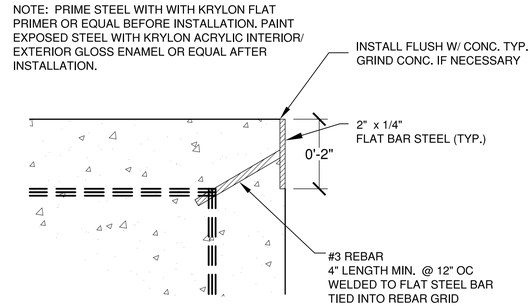


13 SP3.2 FLAT STEEL BAR GRIND EDGE
SCALE: NTS

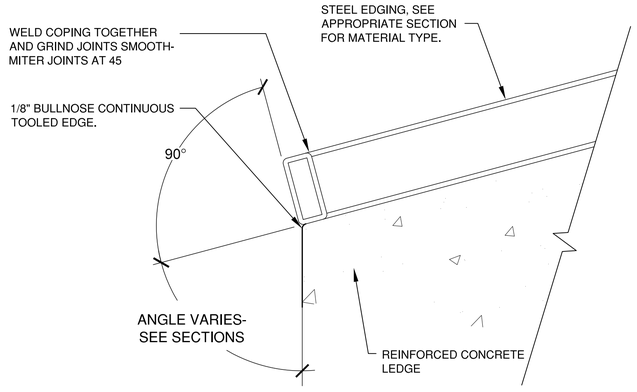


14 SP3.2 HUBBA- SQUARE GRIND EDGE
SCALE: NTS

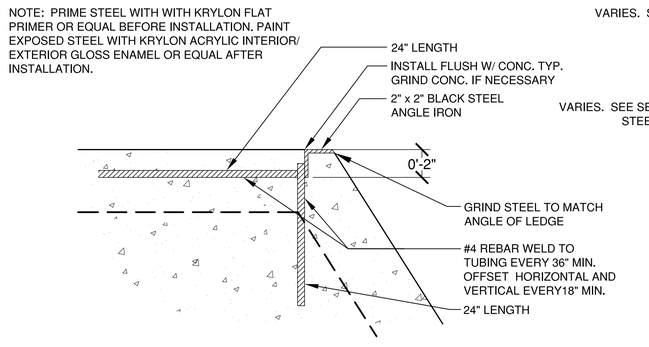


15 SP3.2 STEEL EDGE- BANKED LEDGE
SCALE: NTS

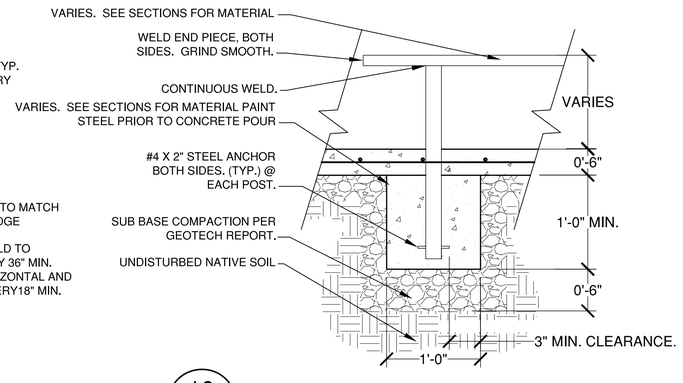


16 SP3.2 HANDRAIL FOOTING
SCALE: NOTES


GRINDLINE
CONCRETE SKATEPARK DESIGN & CONSTRUCTION
4619 14th Ave SW
Seattle WA 98106
P:206.932.6414 F:206.932.6840
www.grindline.com


100% SUBMITTAL

SCALE: N.T.S

DETAILS

PROJECT: SUNNYSIDE NEIGHBORHOOD SKATEPARK
LOCATION: COLLEGE PARK, MD

SHEET: SP3.2

DATE: 04.29.11

DRAWN BY: JRJ
CHECKED BY: MBF


This design is an instrument of professional service and is the property of Grindline Skateparks Inc. Any use of these plans shall be restricted to the project for which they were prepared.